GENERAL INFORMATION

TH-920D(TX) + RV-0356/0356H

Programmable R/F Thermostat-pair

This Programmable R/F controlled Room-Thermosta-Pair consists of a mobile Transmitter Unit **TH-920D(TX)** (Surface-mount bracket for installing this unit is available) and a Receiver unit **RV-0356/0356H** which is designed with flush-mounting structure to fit most commercially availablerecessed conduit boxes of 60 mm. (Surface-mount box for installing this unit is also available)

Its installation requires no wiring between Transmitter & Receiver and can be fitted in any normal operating environment within 30 meters range between the two units.

Unique facility of **R/F-address code setting** is built into R/F Receiver as part of commissioning procedure to ensure that your R/F Receiver will only respond to instruction sent to it from Transmitter.

The special feature of blue-backlit & soft-Key in the Transmitter is made of translucent rubber allows Blue LED project through it to provide easy operating in dim surrounding.

There are 3 working frequencies in this thermostat-pair available for choice. Working " frequency" is marked on the top right of plastic housing on both Transmitter and Receiver. The marked frequency on both units must be consistent, or this thermostat pair will not operate.

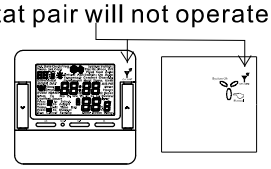

The transmitter unit is powered by 4 x AAA Alkaline, 2 batteries to power the thermostat, another 2 to power the Blue-backlit & LED, the Receiver unit will be connected to the main in operating.

Description to model codes for Ordering Information

(Refer to description of **Default settings at production---**page-programming instruction#1)

For Transmitter-unit

TH - 920D(T866) - H 4 5 S (Example of Model Codes)

Working frequency

For heating

4 program-period

6 program-period

5-1-1d

7d

With Shortest cycle protection

Without Shortest cycle protection

TH - 920D(T433) - H 6 7 0

For Receiver-unit

RV-0356 : Volt-free contact output.
RV-0356H : Volt output

Technical Data

Transmitter unit TH-920D (TX)

1. Power supply : 1.5 V AAA Battery x 4
   2 pieces each for Transmitter-uint's operating and back light
2. Battery : 1 year
3. Temperature reading : °C/°F selective by internal setting
4. Clock format : 24H/12H selective by internal setting
5. Temperature sampling rate : 1 minute
6. Switching differential (Hysteresis) :
   0.5°C~1.0°C / 1.0°F~2.0°F selective by internal setting
7. Temperature control range : 5~35°C
8. Temperature display range : 0~50°C
9. Temperature setting: 1.0℃
10. Programming feature:
    7-d or 5-1-1d day-format & P6/P4 program-periods/day by default setting, not selective at user's side.
11. Shortest cycle rate protection :
    3-minute, default setting "deactivated".
12. Non volatile EEPROM ensure no program/setting loss
13. Temperature sensor: NTC 100K Ω at 25 °C
14. **Working Frequency:** 3 types for option
    (preset ,not selective at user's side)
    T433 : 433.92 MHZ
    T868 : 868.35 MHZ
    T915 : 915 MHZ
15. R/F signal transmission cycle :
    transmits 3 times in cycle of 2.5 minutes,continuous.
16. Working distance : 30 meters
17. Dimension :110.8 W x 104 H x21.5 D mm

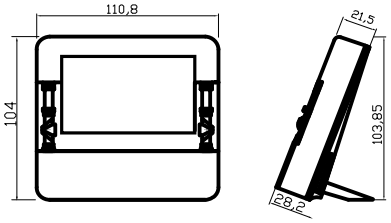

Receiver Unit - RV-0356/RV-0356H

1. Operating power: 230Vac 50/60Hz
2. Power consumption : 5VA
3. Output rating:16 Amp/250Vac resistive,
   RV-0356 Volt free, **RV-0356H** Volt output
4. Storage temperature: -10°C ~ 60°C
5. Working frequency : a-433.92MHz b-868.35MHz c-915MHz
6. Working distance : 30 Meters
7. Temperature sensor: NTC 10 KΩ at 25°C
8. Installation : 60 mm flush-mount
9. Dimension : 88.0 W x 88.0 H x 39.4 D mm

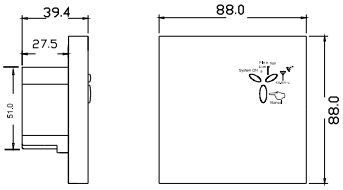

INSTALLATION #1----- Fixing plug-in stand and replacing batteries

⚠ DANGER ⚠

Electric Shock Or Fire Hazard

READ ALL WIRE SIZING, VOLTAGE REQUIREMENT AND SAFETY DATA AVOID PROPERTY DAMAGE AND PERSONAL INJURY

Very important description for the use of this R/F thermostat-pair are described in this section of instruction-sheet,it's advised to follow each of description upon installing the thermostat-pair.

Product description

Transmitter unit

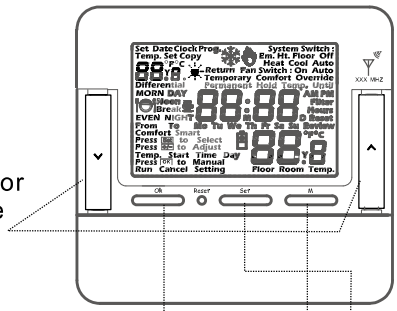

Receiver unit

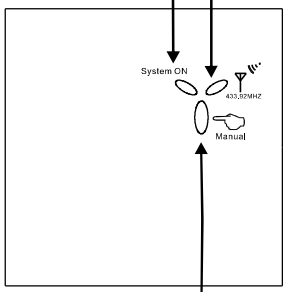

Manual mode Heating start-up
When R/F signal has failed, press this button to tentative resume heating if required.

After R/F operating resumed, temperature will be controlled by Transmitter-unit again.

Fixing the Plug-in stand on Transmitter unit

1.Insert "—" head screw-driver into position shown above.

2.Push upward.

3.Pull stand off back plastic housing.

Make sure the "stand" faces to correct direction.

4.Hold the stand with hand, press it vertically against the "groove" originally is to store the stand.

5.Glide the "stand" downward.

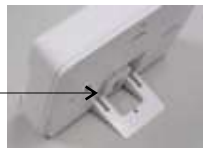

6.The stand is now fixed.

Pressing "stand" downward, as shown in picture above, can take it off from back housing.

Replacing batteries in Transmitter-unit

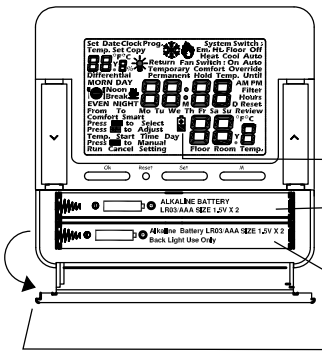

When seeing the " Battery Low warning sign appears on LCD, be sure to replace battery immediate

Flip to open the flap on front plastic housing.

Upper compartment 2 x 1.5V AAA for powering transmitter.

Lower compartment , 2 x 1.5V AAA for backlit.

INSTALLATION #2-----RF Add. Code setting

To open plastic housings will be required

To open and assembly the Transmitter unit

(Flat-head screw-driver required as assisting tool)

To open

1. Insert screw-driver in position as shown in picture.

2. Tilting downward to loosen the "hook-on" closure.

3. Open by hands as shown in picture.

To assembly

1. Placing the "hook-on" closure at position as shown in picture.

2. Press to firmly close.

To open and assembly the Receiver unit

("+" head screw-driver required as assisting tool)

To open

1. To slacken the fastening screw to the direction as shown in picture.

2. Taking off the top housing.

To assembly

1. Placing the stud on the top housing into the square-hole on the bottom housing as shown above.

2. Close them by hands and to line up the "groove" with the screw, as shown above.

3. Tighten the screw

RF Address Code Setting

(On the back of top housing of Transmitter unit)

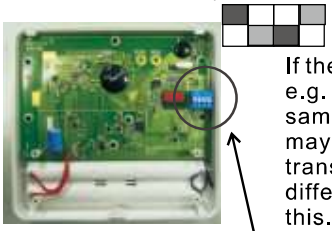

If there is another user nearby, e.g. in the next house, installs the same RV-0356 unit, your receiver may be fault triggered by his/her transmitter. You may select a different RF address code to prevent this. Receiver can only response to RF coding with the same address code setting as its own address code.

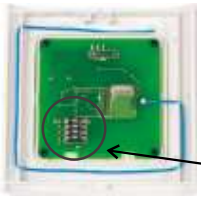

Position both Transmitter and Receiver DIP-Switches with the same arrangement.

(On the back of top housing of Receiver unit)

PROGRAMMING INSTRUCTIONS#1-----Transmitter unit

Within programming mode, transmitter unit shall automatically resume its operating after a delay of 30 seconds.

Default settings at production

There are few settings by **preset at factory** upon production, not selective to users. Be certain to consult with your supplier to acquire suitable model to your demand before ordering. (Refer to **Descriptions to models codes** for ordering information---page-General information).

1.Cool /Heat mode- default setting Heat mode for this R/F floor-heating
2.Shortest cycle protection - 3-minute- Default setting: Deactivated
3.**7-d**/**5-1-1d-** Program-period(event) per Day. subject to ordering.
4.**P6**/**P4-** 6 or 4 Program period(event) per day subject to ordering.

Checking the model you have acquired, and programming it in accordance with following instructions.

The unit was produced with special feature of "flashing display" on LCD to assist users to completing the programming.

Start programming

Internal setting (adjustable to users)
These internal settings are selective, choosing the required settings and set the Date/Clock to accurate time before programming this Transmitter unit.

Follow procedure below;

Pressing and hold Set for 6 seconds to enter setting selection mode. And to follow the flashing Symbols on LCD to complete following settings.

1.**°C/°F:** Press ∧ or ∨ to choose °F or °C setting.

2.Press Ok to enter next setting(24H/12H selection) after °C/°F selection complete. Continuing to use ∧ or ∨ buttons to choose.

3.Repeating procedure of "pressing Ok for next setting and then pressing ∧ or ∨ buttons to continue completing setting the Date\Clock
Date--Month,Day and YEAR
Clock--Hour and Minute
Switching differential (Hysteresis)
Filter (Service interval)-- Counting the time that the transmitter unit has been in use.
smallest time counting unit: 100 hours

4.Press Ok after internal setting& Date/Clock setting completed.

5.Setting the required programs into transmitter unit.

Programming 7-d

Each of 7 days of week, can be programmed separately. Follow up with flashing display to complete programming.

1. Press Set to enter program setting, (you shall read temperature reading in flashing)

2. Press ∧ or ∨ to set desired **temperature-setpoint** for **1st** program- period (event).

3. Press Ok to enter setting **time-setpoint** for 1st program-period (event),after temperature-setpoint of 1st program-period completed. (You shall read "Hour & Start Time" begin flashing)

4. Press ∧ or ∨ to set time-setpoint for 1st program-period (event).

5.Press Ok to enter setting temperature- setpoint for **2nd** program-period (event),after time-setpoint of 1st program-period completed. (flashing temperature reading appears on LCD again)

6 Repeat same programming procedure

"pressing Ok → ∧ or ∨ → Ok

to complete each of Temperature & Time setpoints for every program-period of day and rest of days in week.

7. When entire programming completed, pressing Set **twice** and then press Ok .

to start operating

Copy function (**In 7-d format only**)
First to select any day of whole 7-day and to complete entire Temperature/Time setpoints to each program-period of the day. (Read Programming procedure described in the **Programming 7-d**)

Taking the selected day as **reference-day** for this '**Copy**' function, and follow descriptions below;

1. Press Set to enter program setting, and then once again pressing Set .

'**From**' begins flashing on LCD.
(Choosing the reference-day **from**)

2. Press ∧ to select the reference-day.

3. Press Ok after reference-day selected.

'**To**' shall begin flashing on LCD.

4. Press ∧ to select the day in week to copy programs to it.

5.Press Ok after the day for "**copy programs to**" selected.

6.Repeating procedure by pressing ∧ → Ok to select more days to copy the programs to.

or pressing ∨ to delete the selected day.

7.Press Ok twice, after desired days for "**copy**" was completed.

PROGRAMMING INSTRUCTIONS#2-----Transmitter unit

Within programming mode, transmitter unit shall automatically resume its operating after a delay of 30 seconds.

Programming 5-1-1d

All 5 weekdays shall has the same programming, Saturday & Sunday to be programmed separately.

1. Press Set to enter program setting. (Temperature reading shall be flashing on LCD)

2. Press ∧ or V to set desired **temperature-setpoint** for 1st program-period(event).

3. Press Ok after temperature-setpoint for **1st** program-period completed. (you shall read "Hour & Start Time" begin flashing)

4. Press ∧ or V to set desired **time-setpoint** for 1st program-period (event).

5. Press Ok to enter setting temperature setpoint for **2nd** program-period (event),after Time setpoint of 1st program-period completed. (flashing temperature reading appears on LCD again)

6.Repeat programming procedure

Ok → ∧ or V → Ok

to complete each of temperature & time setpoints for every program-period(event) of weekdays(5-d).

And to complete programming Saturday & Sunday after programming weekdays was completed.

7. Pressing Set **twice** and then pressing Ok to start operating

Programming default setting

Mode 7-d P6 factory preset

Mon ~ Fri	Time	Temperature	
		Heating mode	Cooling mode
MORN(**P1**)	6:00	70 °F (21 °C)	75 °F (24 °C)
DAY(P2)	8:30	60 (15.5)	85 (29.5)
NOON(P3)	***12:00pm***	***70 (21)***	***75 (24)***
BREAK(P4)	***2:00pm***	***60 (15.5)***	***85 (29.5)***
EVEN(P5)	4:30pm	70 (21)	75 (24)
NIGHT(P6)	10:30pm	65 (18.5)	80 (26.5)
Saturday	**Time**	**Temperature**	
		Heating mode	**Cooling mode**
MORN(P1)	7:00	70 °F (21 °C)	75 °F (24 °C)
DAY(P2)	8:30	70 (21)	75 (24)
NOON(P3)	***12:00pm***	***70 (21)***	***75 (24)***
BREAK(P4)	***2:00pm***	***70 (21)***	***75 (24)***
EVEN(P5)	4:30pm	70 (21)	75 (24)
NIGHT(P6)	10:30pm	***65*** (18.5)	80 (26.5)
Sunday	**Time**	**Temperature**	
		Heating mode	**Cooling mode**
MORN(P1)	7:00	70 °F (21 °C)	75 °F (24 °C)
DAY(P2)	8:30	70 (21)	75 (24)
NOON(P3)	***12:00pm***	***70 (21)***	***75 (24)***
BREAK(P4)	***2:00pm***	***70 (21)***	***75 (24)***
EVEN(P5)	4:30pm	70 (21)	75 (24)
NIGHT(P6)	10:30pm	***65*** (18.5)	80 (26.5)

NOON and BREAK will not appear in P6 mode.

Mode 5-1-1d P4 Factory Preset

Mon. ~ Fri.	Time	Temperature	
		Heating mode	Cooling mode
MORN(P1)	6:00	70°F (21°C)	75°F (24°C)
DAY(P2)	8:30	60 (15.5)	85 (29.5)
EVEN(P3)	4:30 PM	70 (21)	75 (24)
NIGHT(P4)	10:30 PM	65 (18.5)	80 (26.5)
Saturday	Time	Temperature	
		Heating mode	Cooling mode
MORN(P1)	7:00	70°F (21°C)	75 (24°C)
DAY(P2)	8:30	70 (21)	85 (29.5)
EVEN(P3)	4:30 PM	70 (21)	75 (24)
NIGHT(P4)	10:30 PM	65 (18.5)	80 (26.5)
Sunday	Time	Temperature	
		Heating mode	Cooling mode
MORN(P1)	7:00	70°F (21°C)	75°F (24°C)
DAY(P2)	8:30	60 (15.5)	85 (29.5)
EVEN(P3)	4:30 PM	70 (21)	75 (24)
NIGHT(P4)	10:30 PM	65 (18.5)	80 (26.5)

Reminder

In programming-mode, if users want to stop programming thermostat, either to wait for 30 seconds, thermostat shall automatic begin operating or to press **SET** key twice and then press OK key, to set thermostat to immediate run programming.

Follow up with the guidance by flashing digits/symbols on LCD to complete programming.

Importance

1. To program's logic, each day's ending time is at 11:59 in 12H-Format, 23:59 in 24H-Format. Therefore : do not set 12:00 PM for NIGHT(P4) nor 24:00 for NIGHT(P6).

2. Thermostat is designed to run programs by sequential order, do not set program either overlap In time sequence, nor non-sequential Time-setting in program setting,

PROGRAMMING INSTRUCTIONS#3-----Transmitter unit

Within programming mode, transmitter unit shall automatically resume its operating after a delay of 30 seconds.

Override Function (The same on both 7d & 5-1-1d)

---operating guide to each of the **4 modes.**

A. Temporary Override- Change current temperature setting until next setpoint

1. Press Λ or V adjust temperature. ("Temp. Set" symbol shall be flashing on LCD)
2. Wait for 10 seconds, thermostat shall automatically run this temporary override setpoint.

   (or to press Ok to immediate run this override without waiting for 10 seconds)
3. After T**emporary Override** is in executing,

   Press Ok shall terminate its executing.

B.Comfort Override---Change current temperature setpoint to new setpoint for desired hours. Thermostat shall resume its original programming after Comfort Override executing stopped**.**

1. Press M
2. Press Λ or V to adjust desired temperature.(Temp. Set in flashing on LCD screen)
3. Press Ok to select desired hours for comfort-override executing
4. Press Λ or V to set desired hours (minimum 1 hour).
5. Press Ok to run **Comfort Override**.
6. Upon **Comfort Override** is in executing,

   Press Ok again shall immediate stop this Overrride.

C.Permanent Hold Temperature---Hold temperature at desired setpoint permanently until it is called off.

1. Press M
2. Press M again (read indicator on LCD)

.

3. Press Λ or V to set desired temperature. (Temp. Set in flashingon LCD screen)
4. Press Ok to run **Permanent Hold Temperature** (LCD display shall indicate its executing)
5. Upon **Permanent Hold Temperature** is in executing,

   Press Ok shall immediate this Overrride.

D. Temperature Until.(Vacation Hold)---Hold temperature at desired setpoint till to specified date.

1. Press M
2. Press M twice again.
2. Press Λ or V to set desired temperature setpoint. (Temp. Set shall be in flashing)
3. Press Ok to select desired duration of **Hold-Temperature Until**.
4. Press Λ or V to select **Month** first, and then

   Press Ok again to select **Day,** again by

   pressing Λ or V to select desired **DAY.**
5. Press '**OK'** to run **Hold Temperature Until**.
6. Upon **Hold Temperature Until**. is in executing,

   Press Ok shall immediate stop this override.

REMINDER

In Override setting mode, thermostat shall automatic resume its prior programming, in a delay of 30 seconds

Keep to press **M** key, users shall read 4 Override modes appears on LCD screen in sequence.

To follow guidance by flashing on LCD throughout entire procedure of programming overrride functions.

To resume default settings

Pressing Ok and V together for 6 seconds, "**Reset**" shall appear on LCD display.

To press **"Reset"** button.

All previous setting shall be deleted, programming will resume its default setting.

PROPOSED APPLICATION#1-----Wiring of RV-0356H

⚠ DANGER ⚠

Electric Shock Or Fire Hazard

READ ALL WIRE SIZING, VOLTAGE REQUIREMENT AND SAFETY DATA AVOID PROPERTY DAMAGE AND PERSONAL INJURY

Important Note(by FCC, for application of 915 MHz)

1. The changes or modifications not expressly approved by the party responsible for compliance could void the user's authority to operate the equipment.
2. To comply with the FCC RF exposure compliance requirements ,no change to the antenna or the device could result in the device exceeding the RF exposure requirements and void user's authority to operate the device.
3. This device complies with Part 15 of FCC Rules. Operation is subject to the following two conditions (1)this device may not cause harmful interference, and (2)this device must accept any interference received,including interference that may cause undesired operation.

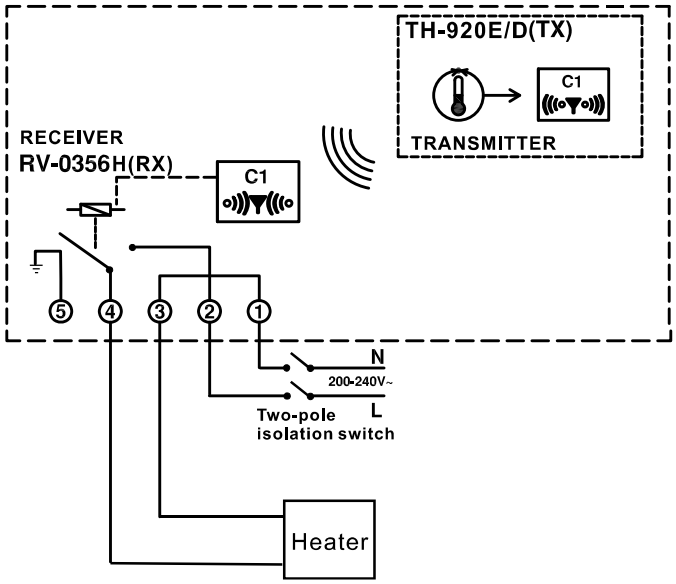

Choosing correct location for the thermostat-pair

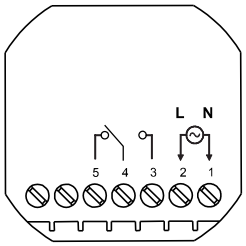

The transmitter-unit is mobile device, keep it at the location near you for control of heating.

A surface-mount bracket is available for option, if mounting the transmitter-unit on wall is required(refer to the page-Optional Accessories).

The mounting height of Receiver-unit should be approximate 1.5 meters above the floor.

Receiver-unit can be fitted to most commercially available recessed conduit boxes or directly on the wall. Surface-mount box for installing this unit is also available(Refer to the page-Optional Accessories).

Transmitter unit & Receiver unit should be positioned within 30 meters range in the same room.

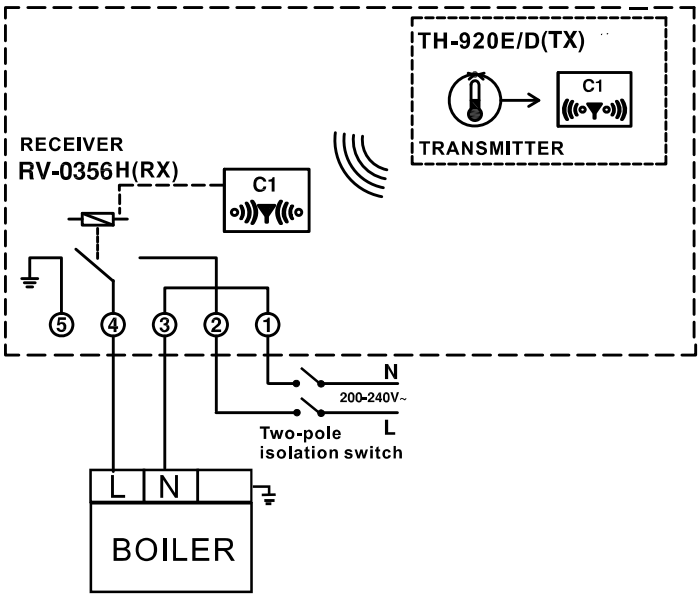

Content in packages

In Transmitter unit package
1. Transmitter unit x 1 unit
2. Instruction sheet x 1 set
3. Alkaline AAA x 4 pieces
4. Machine screw 3.5 x 25 mm x 2 pieces
5. Anchor 9Φ x25mm x 2 pieces

In Receiver unit package
1. Receiver unit x 1 unit
2. self-tapping screw 3.5 x 25 mm x 2 pieces
3. Machine screw M3x 20mm x 2 pieces

PROPOSED APPLICATION#2-----Wiring of RV-0356

⚠ DANGER ⚠

Electric Shock Or Fire Hazard

READ ALL WIRE SIZING, VOLTAGE REQUIREMENT AND SAFETY DATA AVOID PROPERTY DAMAGE AND PERSONAL INJURY

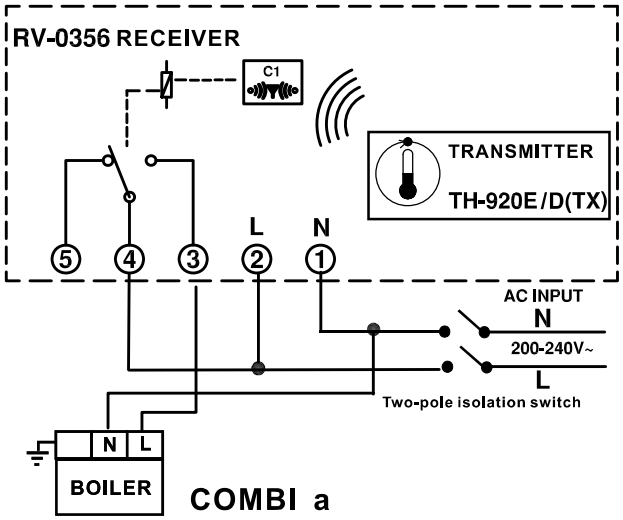

COMBI a

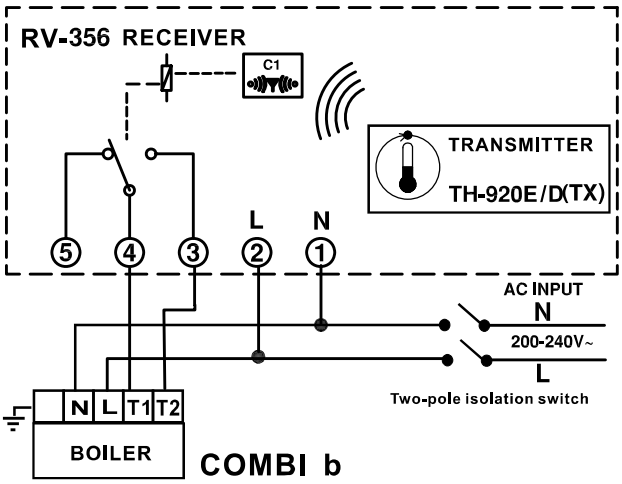

COMBI b

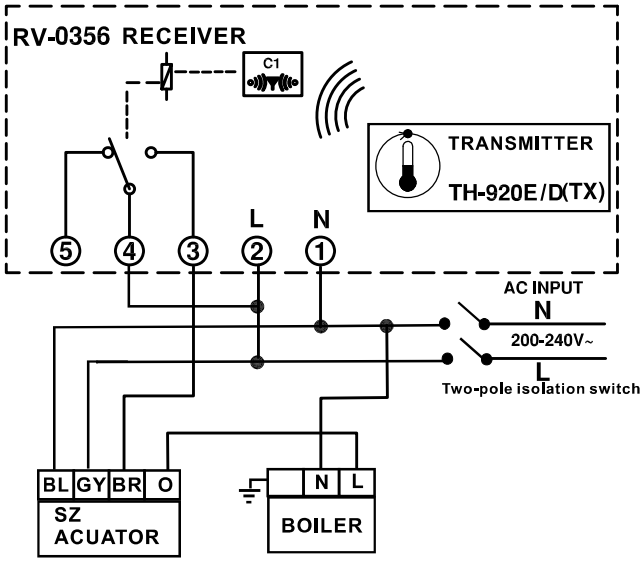

SPRING RETURN ACTUATOR

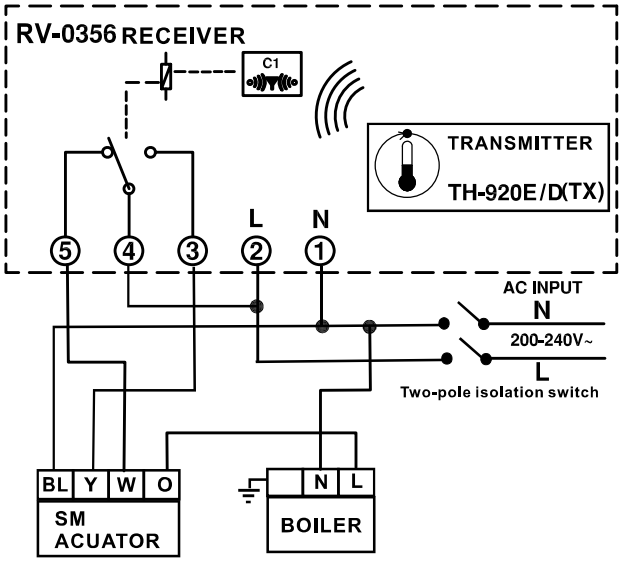

MOTOR ON/OFF ACTUATOR

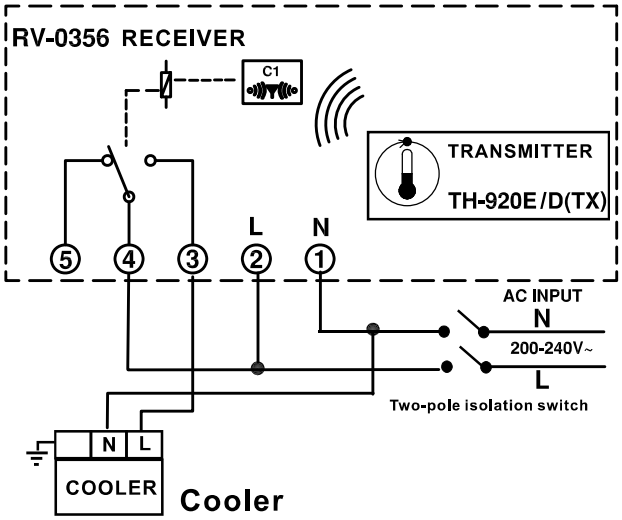

Cooler

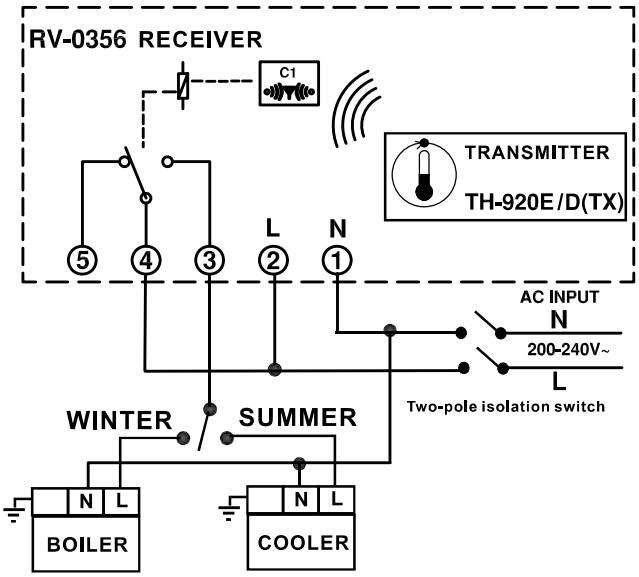

HEATER / COOLER

OPTIONAL ACCESSORIES — for installing TH-920D & RV-0356/0356H

Wall-mount bracket for Transmitter unit TH-920D

1.Anchor Φ9 x 25 L x 6 Dia. mm .....2 pieces
2.Self-tapping screws Φ7 x 25 L x 3.5 Dia. mm ..2 pieces

included in package

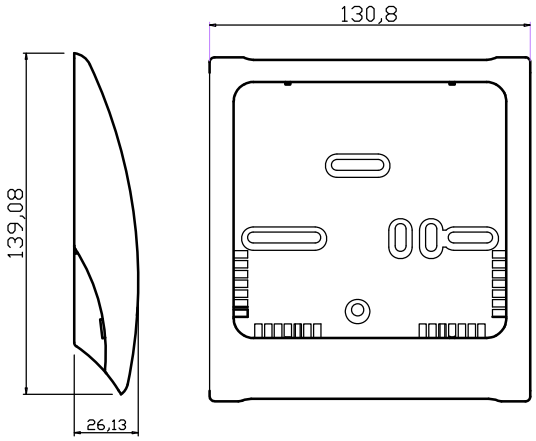

Wall-mount box for Receiver unit RV-0356/0356H

1.Anchor Φ9 x 25 L x 6 Dia. mm ..... 2 pieces
2.Self-tapping screws Φ7 x 25 L x 3.5 Dia. mm..2 pieces

included in package